Spherical roller bearings, cylindrical and tapered bore

Principal dimensions			Basic load ratings		Speed ratings		Designation
			dynamic	static	Reference speed	Limiting speed	
d	D	B	C	C0			* SKF Explorer bearing
mm			kN		r/min		-
440	600	118	2506	4900	950	1000	23988 CCK/W33 *

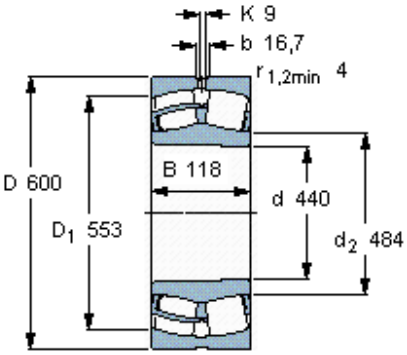

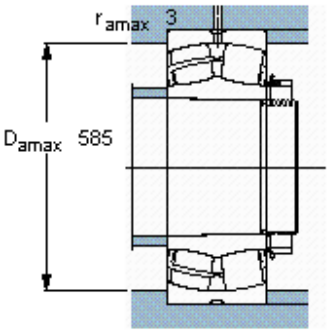

Tapered bore, taper
1: 12

Calculation factors

e 0,16
Y_1 4,2
Y_2 6,3
Y_0 4